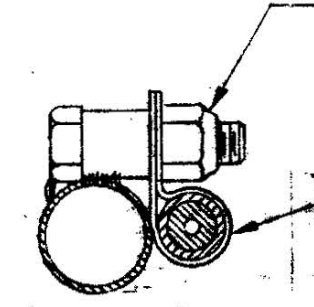
ELASTIC STOP NUT #42E-048
THROTTLE CONTROL ASSY.

SECTION C-C
FULL SIZE

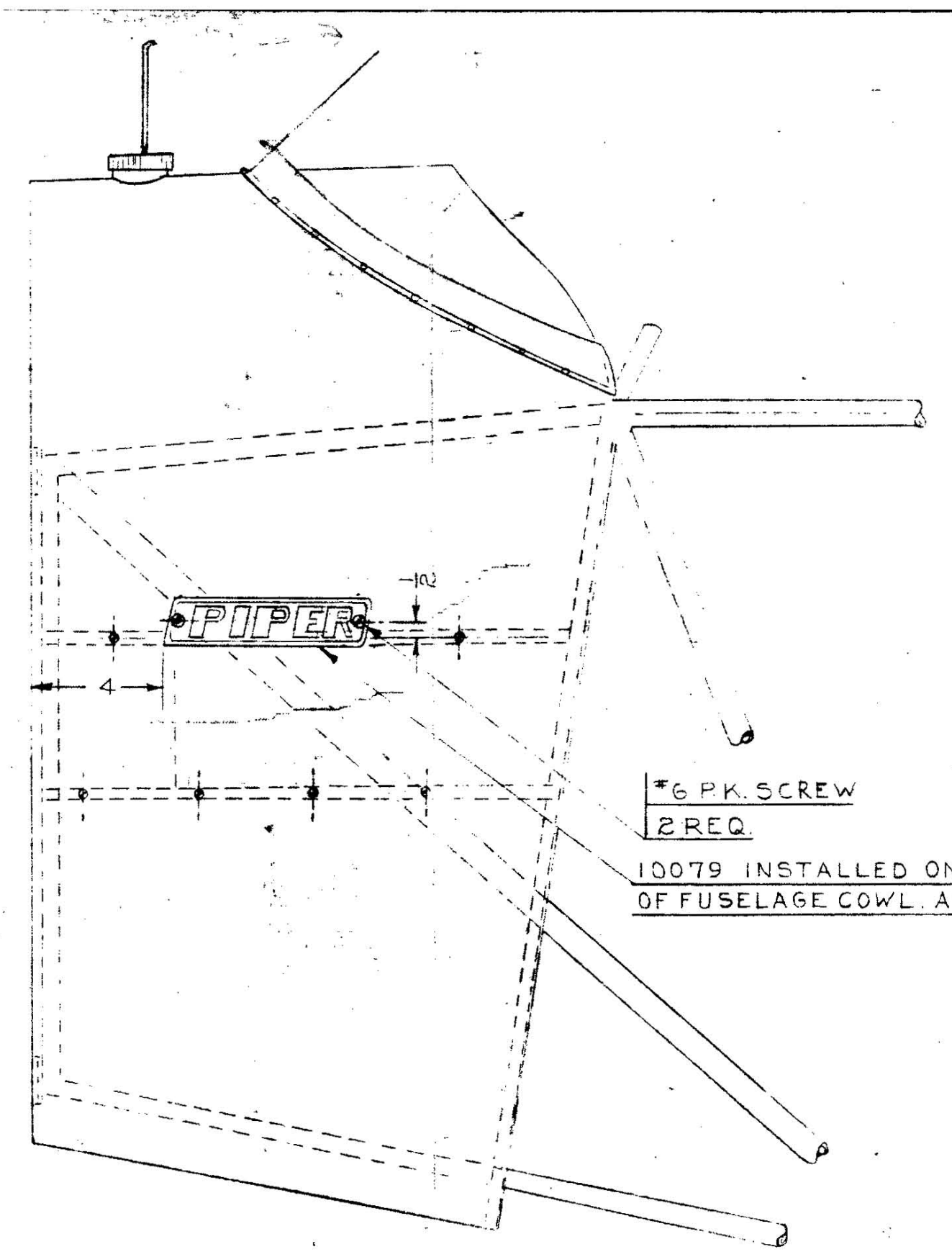
PIPER
4
#6 P.K. SCREW
2 REQ.
10079 INSTALLED ON BOTH SIDES
OF FUSELAGE COWL. AS SHOWN

FIG. 6

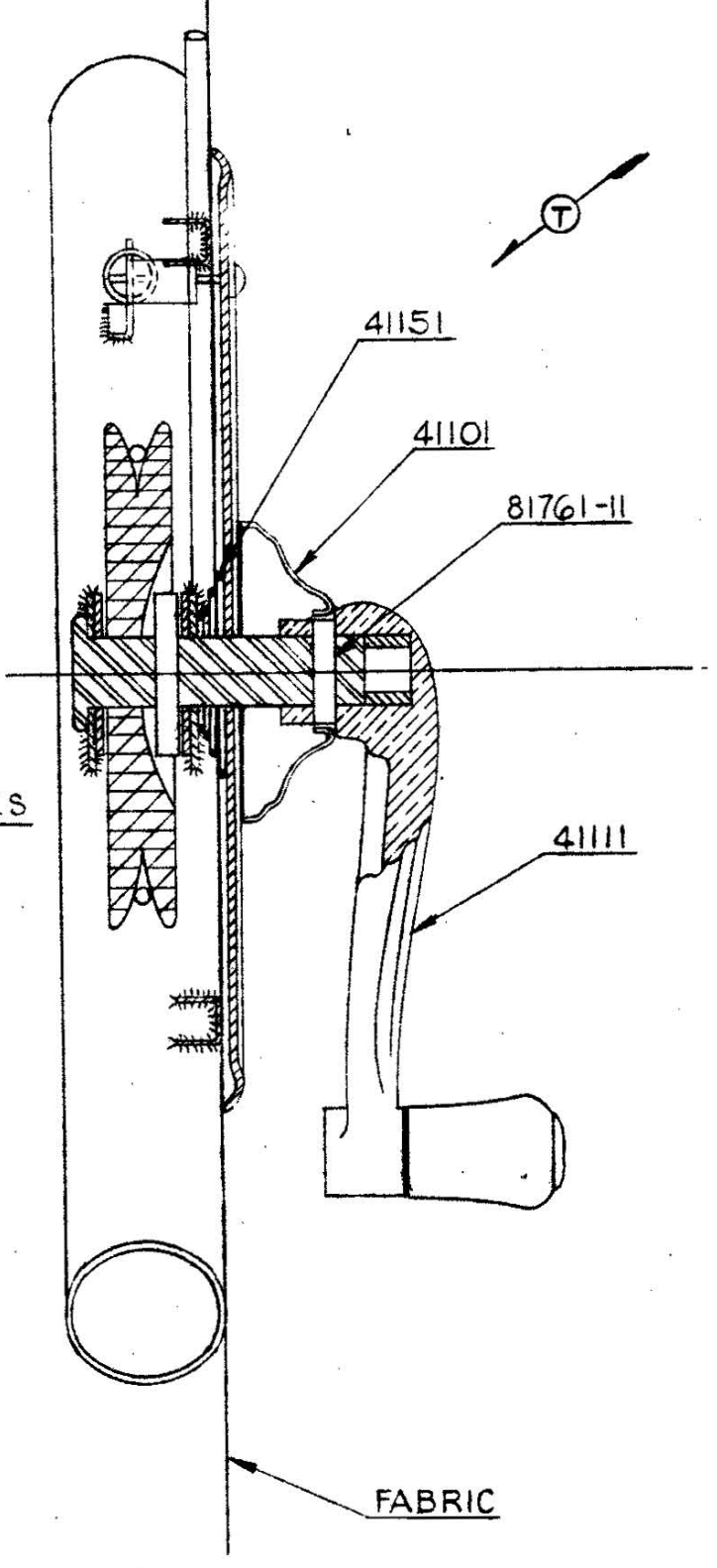
41151
41101
81761-11
41111
FABRIC

SECTION B-B
FULL SIZE

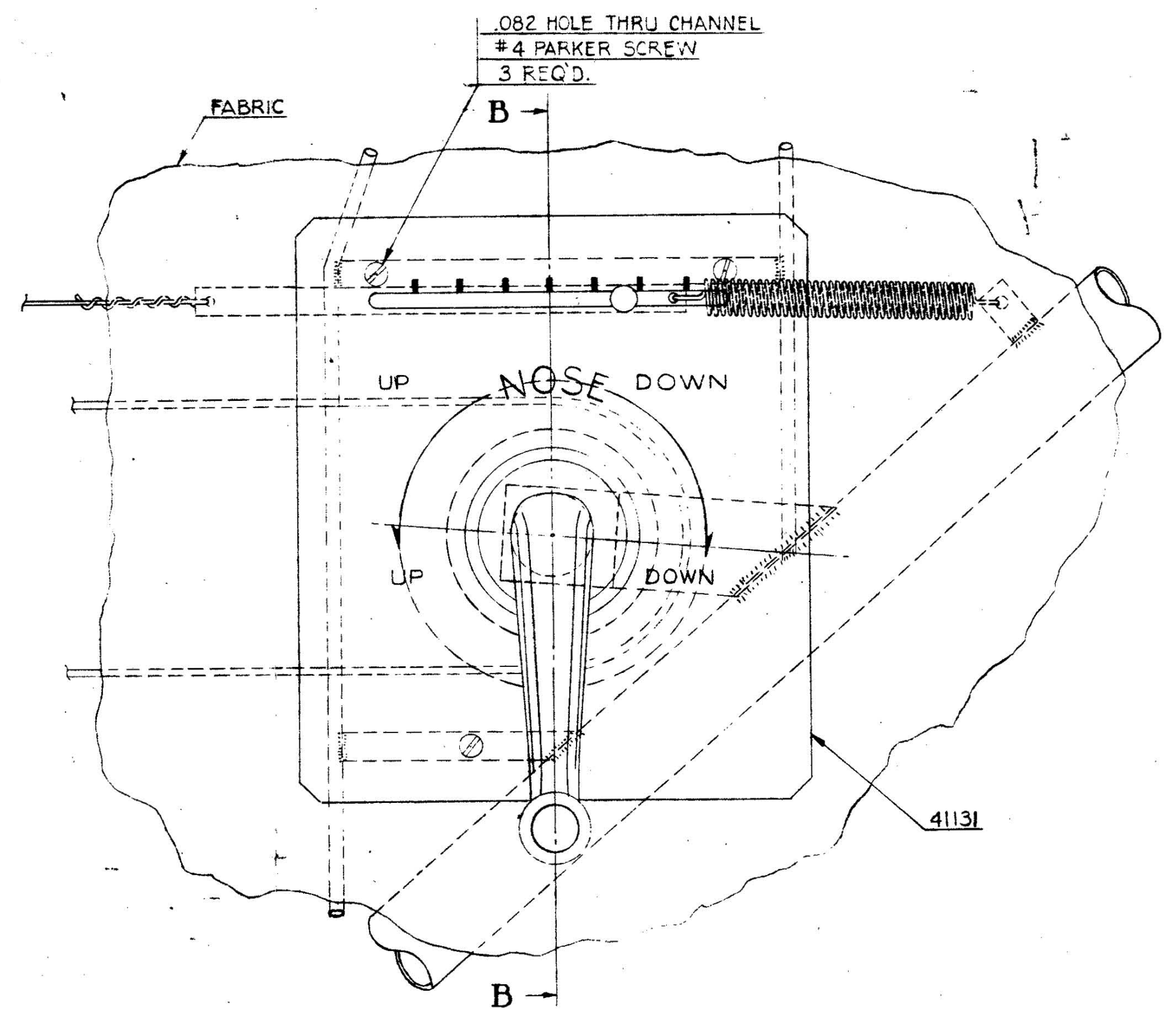
.082 HOLE THRU CHANNEL
#4 PARKER SCREW
3 REQ'D.
FABRIC
B
NOSE
UP
DOWN
UP
DOWN
41131
B

FIG. 4
FULL SIZE

10554
ENCLOSURE INST.
54525
.093 HOLE
#6 P.K. SCREW
3 REQ'D. (EQUALLY SPACED)
INSTRUMENT PANEL
INST. 54503
SEE FIG. 5 FOR INST. OF
SERIAL NUMBER PLACARD
52792
FUEL SHUT-OFF
CONTROL INST.
50631
41541
52852
41512
41551
41221
PIPER
SEE FIG. 6
SEE FIG. 3 FOR HOSE CONNECTION DETAIL
83891-2
-2 SUB ASS'Y
50982 & 50942
SEAT BACK &
BOTTOM CANVAS
LACED ON WITH
#4 MASON LINE
24165
SEE FIG. 2
CARBURETOR HEAT
CONTROL INST. 50891
52362
SEE FIG. 1
10553
SEE FIG. 4
A
A
52782
-3 SUB ASS'Y
REAR SEAT INST.
51953
AN3-5
AN310-3
AN380-2-2
2 REQ.
SEE NOTE 2

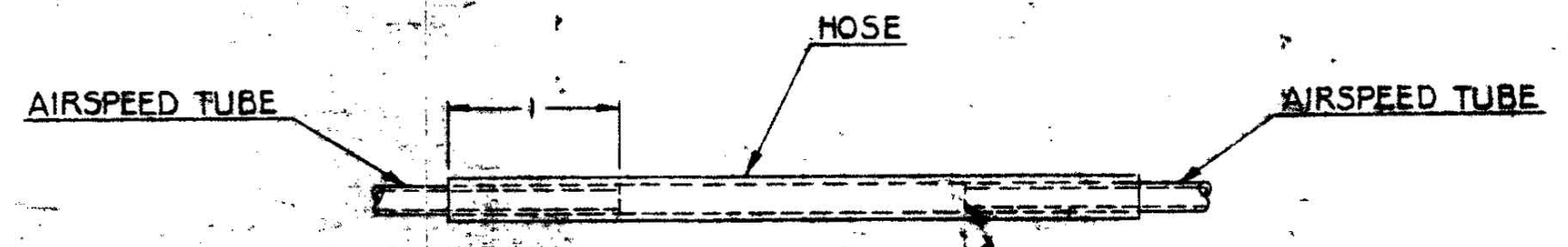
AIRSPEED TUBE
HOSE
AIRSPEED TUBE
1

FIG. 3 DETAIL
FULL SIZE

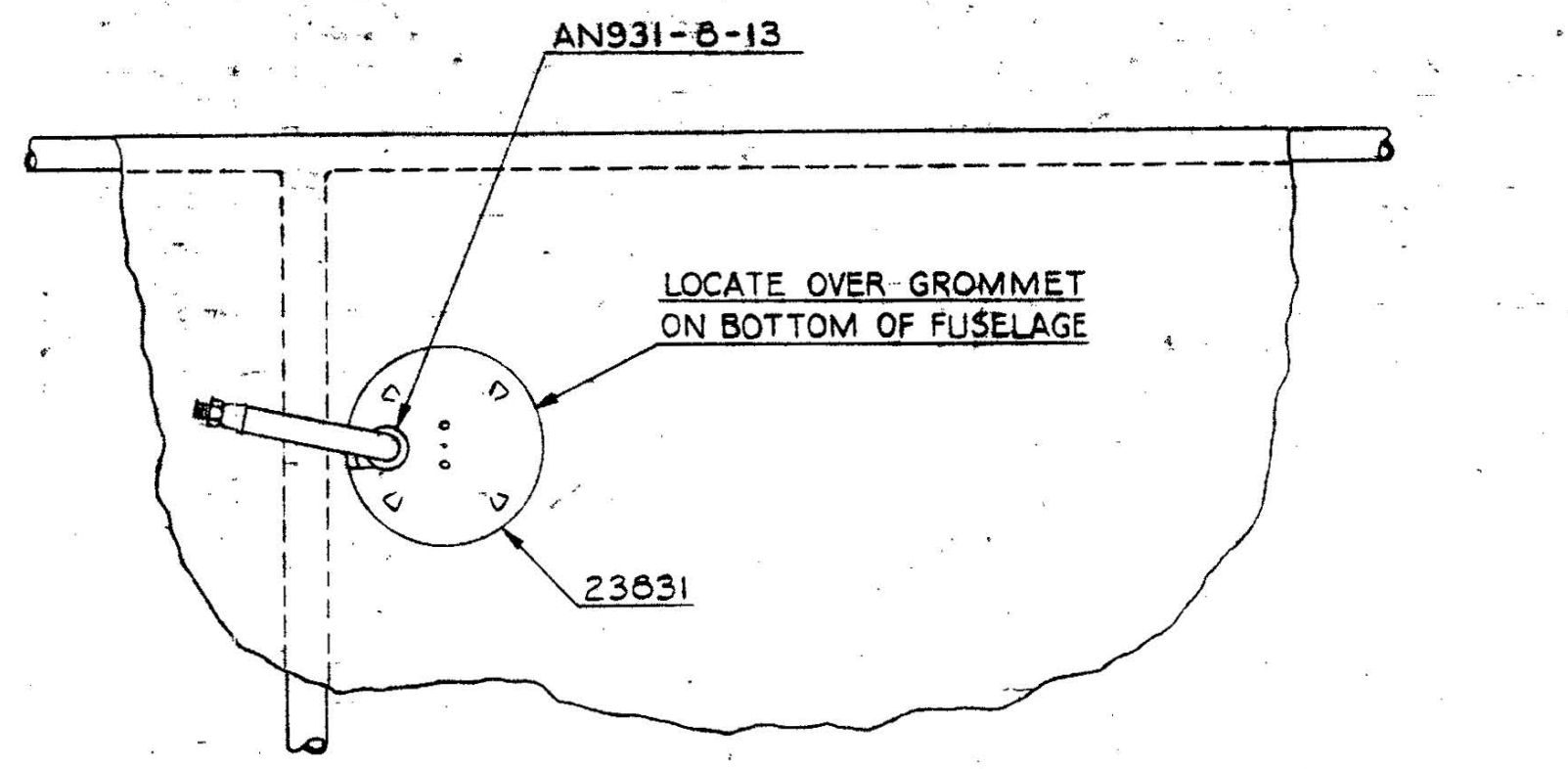
AN931-8-13
LOCATE OVER GROMMET
ON BOTTOM OF FUSELAGE
23831

FIG. 1

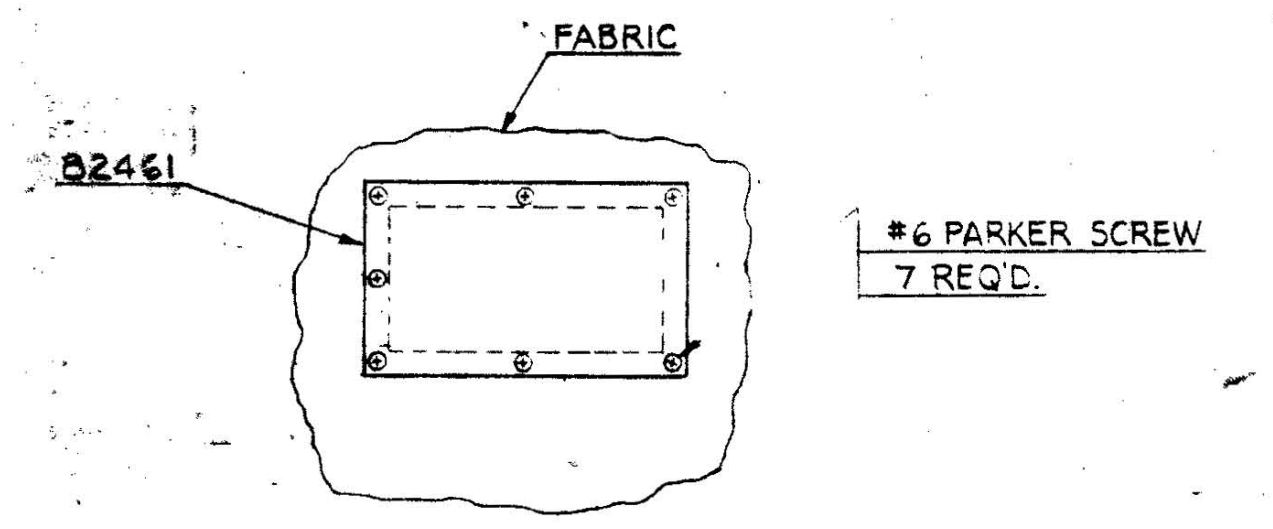
FABRIC
82461
#6 PARKER SCREW
7 REQ'D.

FIG. 2

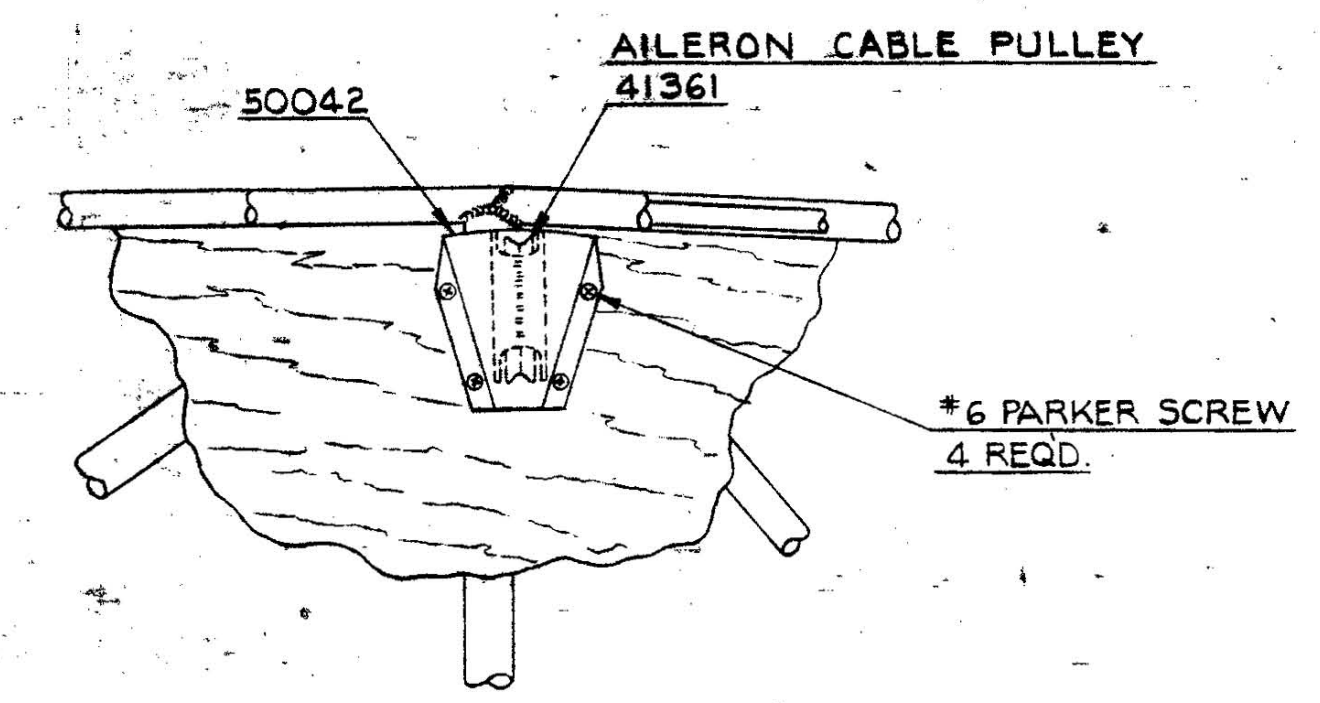
AILERON CABLE PULLEY
41361
50042
#6 PARKER SCREW
4 REQ'D.

VIEW A-A
TOP VIEW OF AILERON CABLE PULLEY
HOUSING: RIGHT SHOWN, LEFT IDENTICAL

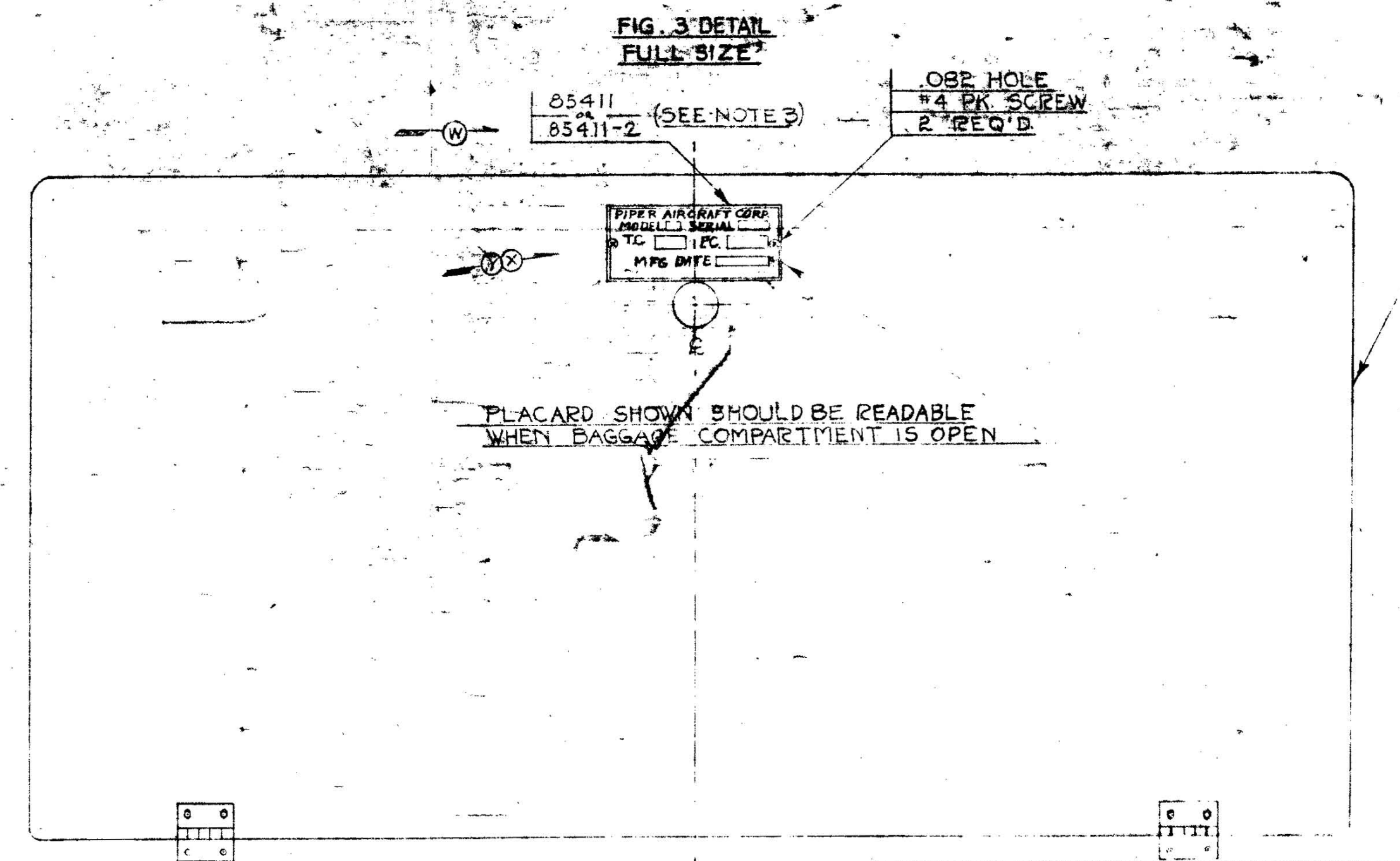
85411
or
85411-2
(SEE NOTE 3)
.082 HOLE
#4 PK. SCREW
2 REQ'D.
BAGGAGE COMPARTMENT LID
PIPER AIRCRAFT CORP.
MODEL
SERIAL
T.C.
P.C.
MFG DATE
PLACARD SHOWN SHOULD BE READABLE
WHEN BAGGAGE COMPARTMENT IS OPEN.

FIG. 5
HALF SIZE

1. PARTS MARKED R USED ON RIGHT SIDE ONLY
   PARTS MARKED L USED ON LEFT SIDE ONLY
2. WHERE "SEE NOTE 2" IS INDICATED ELASTIC STOP NUTS, FIBER LOCK NUTS OR BOOTS' NUTS MAY BE USED IN PLACE OF AN NUTS.
3. 85411 USED ON AIRPLANES MANUFACTURED IN LOCK HAVEN.
   85411-2 USED ON AIRPLANES MANUFACTURED IN PONCA CITY.

LIMITS, SHOP PRACTICES AND FINISH UNLESS OTHERWISE NOTED, TO BE IN ACCORDANCE WITH PIPER SPECIFICATIONS 80 AND 880

LET.	REVISION	DATE	BY
Y	85411 RELOCATED FIG 5 REVISED	[illegible]	H.D.B.
X	85411 RELOCATED	[illegible]	C.E.K.
W	85411-2 & NOTE 3 ADDED	9-2?-46	C.E.K.
V	FIG 5 REVISED	9-26-46	C.E.K.
U	[illegible] SCREWS	8-7-46	[illegible]
T	41151 REVERSED AND RELOCATED.	6-3-46	R.S.C.
S	SAFETY BELT ASSY 13641-4 REM	4-26-46	C.E.K.
R	-2 & -3 SUB ASSY ADDED	4-2?-46	C.E.K.
Q	REF. TO CONNECTOR W6x3 REM	4-23-46	C.E.K.
P	[illegible]	4-10-46	L.R.
O	[illegible] TAPE & NOTE REM.	4-10-46	L.R.
N	10553 ATTACH [illegible] ADDED	4-10-46	L.R.
M	[illegible]	4-10-46	L.R.
L	AE300D 58932-3 WAS AE300D 58521 AE300D 58933-26 WAS AE300D 58522 ALT AE300D 58520 [illegible] AE300D 58693 REM.	3-21-46	C.E.K.
K	AE300D 58932-43 WAS AE300D 58521 AE300D 58933-26 WAS AE300D 58522 ALT. AE300D 58521 & AE 305D 58693 REM.	3-21-46	C.E.K.
J	.093 HOLE REF. REM. ON FIG. 2	2-14-46	C.E.K.
H	IGNITION SWITCH RELOCATED	11-16-45	J.E.H.
G	REMOVED 85183	11-16-45	J.E.H.
F	4 #6 P.K. SCREWS ADDED	9-26-45	I.M.
E	10079 & FIG. 6 ADDED	9-26-45	I.M.
D	COMP. MALE CONNECTOR W6x3 ADDED	8-22-45	C.E.K.
C	SLEEVE W6x3 & COMP. NUT W6x3 REM	8-22-45	C.E.K.
B	FLOORBOARD VIEW REVISED	8-?-45	E.C.M.
A	82692 FIRE EXTINGUISHER INST. REM.	5-23-45	I.M.

MODEL	PER SHIP	NEXT ASSEMBLY	SUPERSEDES	SUPERSEDED BY
J3	[illegible]	82253	[illegible]	[illegible]

PIPER AIRCRAFT CORP.
LOCK HAVEN, PENN.